DOMETIC Heki2

1

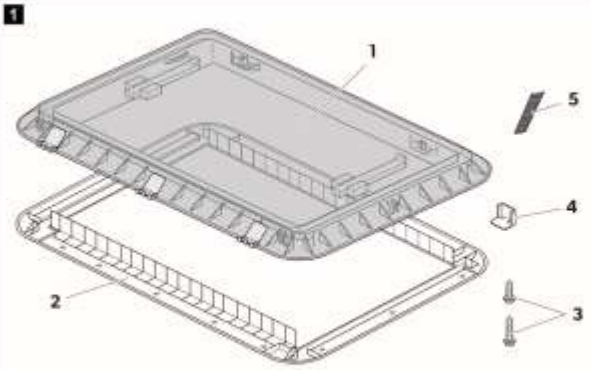

2

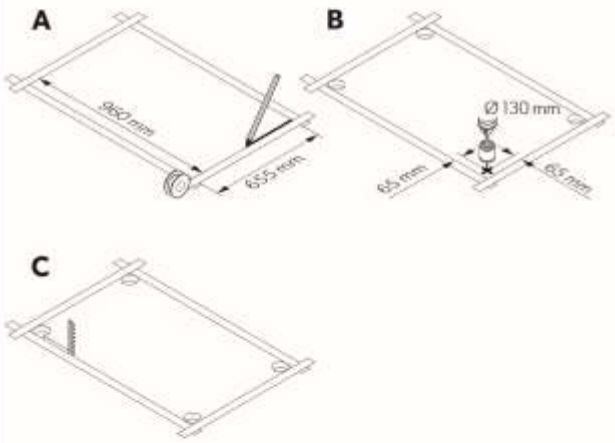

3

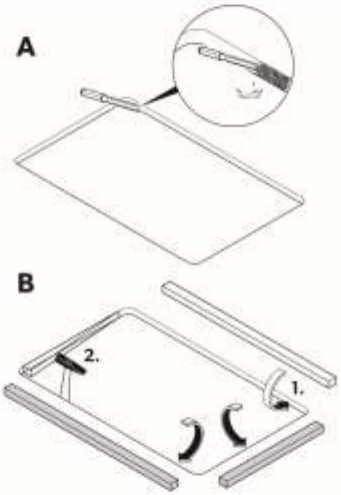

4

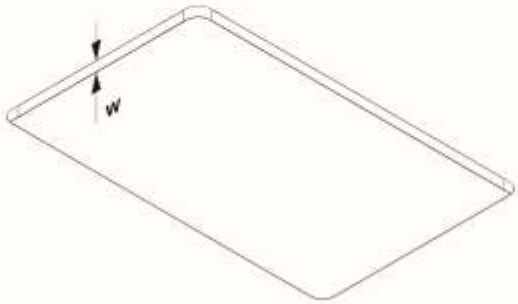

5

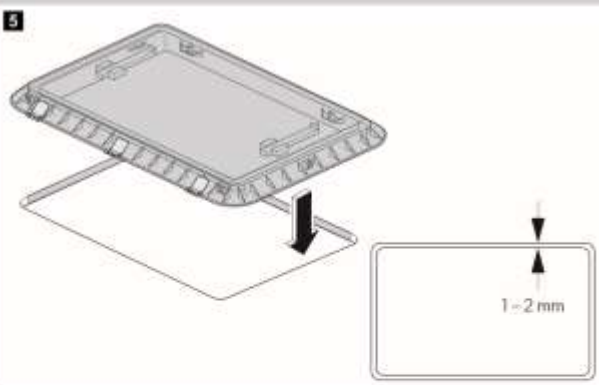

6

7

8

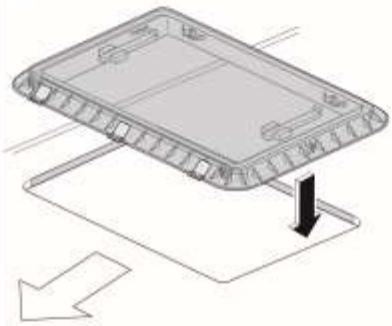

9

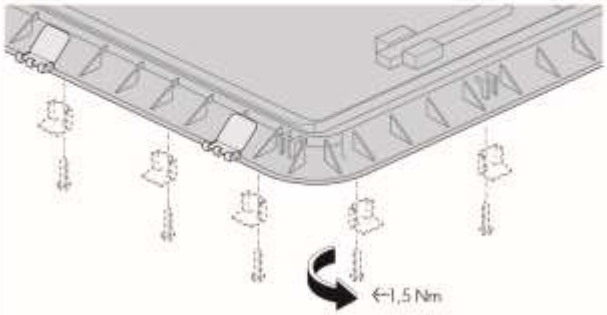

10

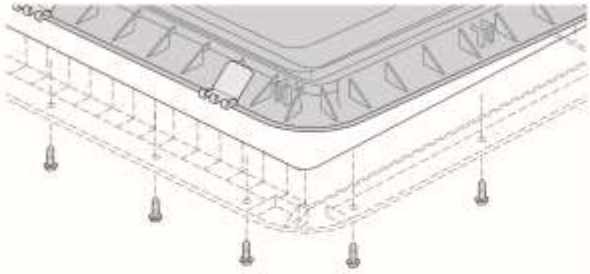

11

12

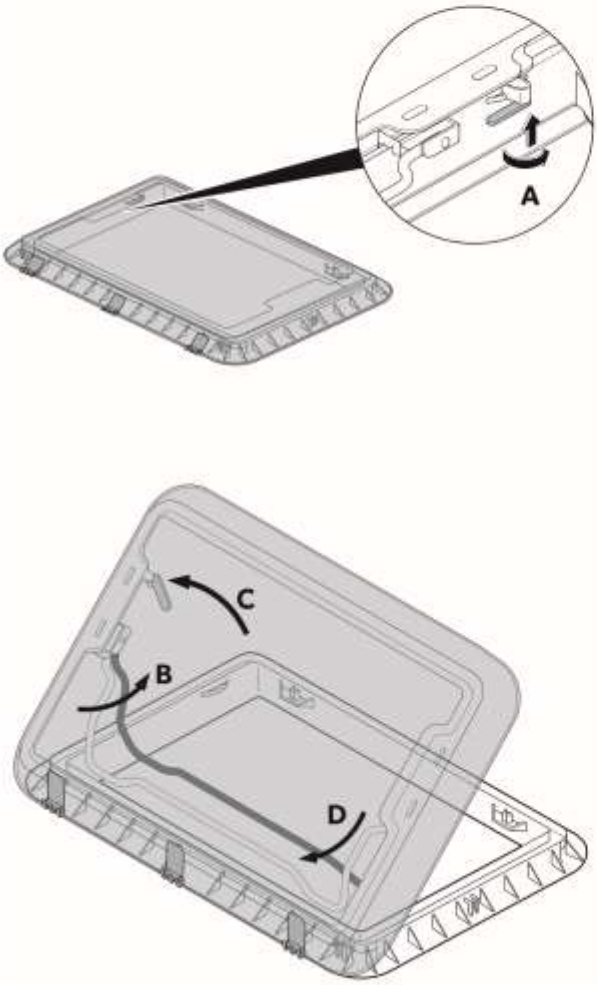

13

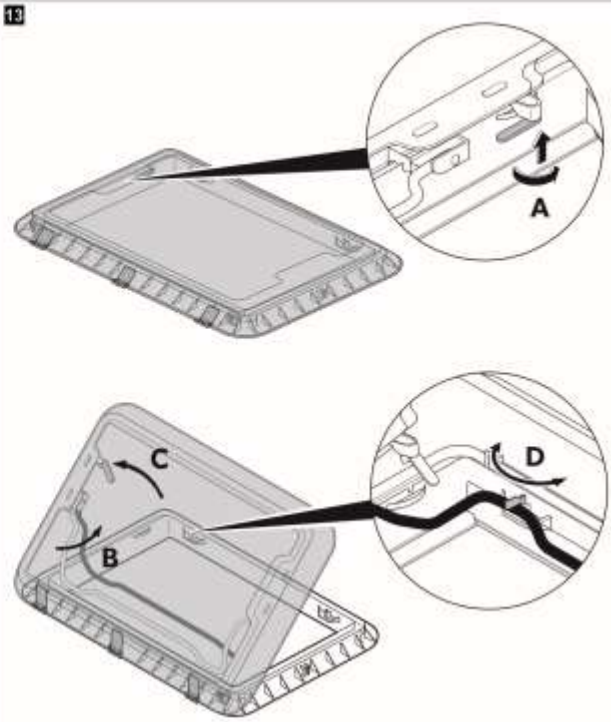

14

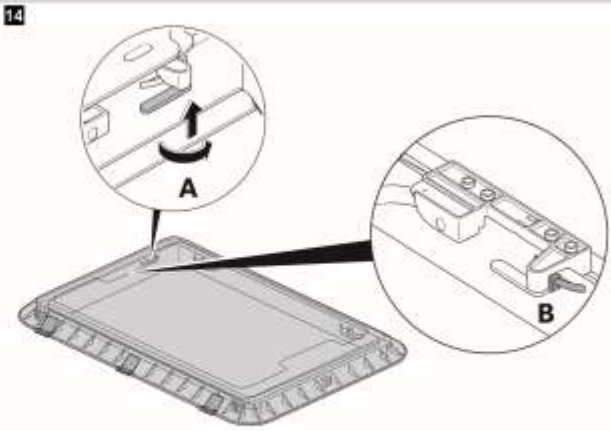

15

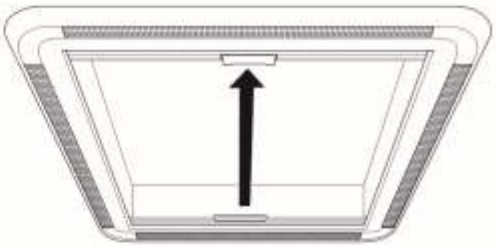

16

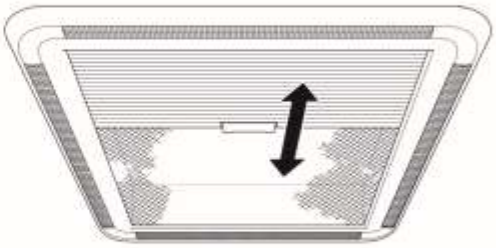

DOMETIC

Dometic WAECO International GmbH
Hollefeldstrasse 63
D-48282 Emsdetten
www.dometic.com

4445101880 L 07/2010 M1104B/01

NO **Takvindu**
Monterings- og bruksanvisning. 91

FI **Kattoikkuna**
Asennus- ja käyttöohje 100

RU **Окно для крыши**
Инструкция по монтажу и эксплуатации 109

DOMETIC

WINDOWS & DOORS WINDOWS

PL **Okno dachowe**
Instrukcja montażu i obsługi. 120

SK **Strešné okno**
Návod na montáž a uvedenie
do prevádzky. 130

CS **Střešní okno**
Návod k montáži a obsluze 140

HU **Tetőablak**
Szerelési és használati útmutató 150

Heki2

EN **Roof light**
Installation and Operating Manual. 3

DE **Dachfenster**
Montage- und Bedienungsanleitung. 13

FR **Dôme de toit**
Instructions de montage
et de service. 23

ES **Claraboya**
Instrucciones de montaje y de uso. 33

PT **Clarabóia**
Instruções de montagem e manual de
instruções. 43

IT **Obl**

Istruzioni di montaggio e d’uso 53

NL **Dakraam**
Montagehandleiding en
gebruiksaanwijzing 63

DA **Tagvindue**
Monterings- og betjeningsvejledning 73

SV **Takfönster**
Monterings- och bruksanvisning 82

Please read this instruction manual carefully before installation and first use, and store it in a safe place. If you pass on the product to another person, hand over this instruction manual along with it.

Table of contents

1 Explanation of symbols. 3

2 Safety and installation instructions . . . . . .

.4 3 Scope of delivery 5

4 Optional extras 5

5 Intended use 5

6 Instructions before installation . . . . . .

.6 7 Installing the Heki2 7

8 Using the Heki2 9

9 Troubleshooting 11

10 Maintaining and cleaning the Heki2 11

11 Guarantee 12

12 Disposal. 12

1 Explanation of symbols

A

NOTICE!
Failure to observe this instruction can cause material damage and impair the function of the product.

NOTE Supplementary information for operating the product.

Safety and installation instructions

2 Safety and installation instructions

Please observe the prescribed safety instructions and stipulations from the vehicle manufacturer and service workshops.

The manufacturer accepts no liability for damage in the following cases:

- Damage to the product resulting from mechanical influences
- Alterations to the product without express permission from the manufacturer
- Use for purposes other than those described in the operating manual

NOTE
If you do not have sufficient technical knowledge for installing the components in vehicles, you should have a specialist install the roof window in your vehicle.

Please note the following:

- If faults or disturbances occur, consult a specialist workshop immediately.

Heki2

- Risk of breakage! Do not tread on the glass dome.
- Before starting your journey, check that the roof window is locked properly.
- Before starting your journey, check the roof window for damage (such as tension cracks in the acrylic glass).
- Do **not** open the roof window while driving.
- Do **not** open the window in strong wind or rain.
- Close the roof window if it rains or snows.
- Do **not** leave the vehicle with the roof window open.
- Keep the roof window free of snow and ice.

3 Scope of delivery

No. in fig. 1	**Quantity**	**Designation**
1	1	Outer frame with glass dome
2	1	Inner frame
3	16 16	Fastening screw ∅ 4 x 25 mm Fastening screw ∅ 2.5 x 12 mm
4	16	Mounting bracket (for roof thickness 25 – 32 mm)
5	9	Ventilation grille

4 Optional extras

Designation	Item no.
Spoiler, 800 mm	9104100236
Spoiler, 1100 mm	9104100237
SunShade roof hood cover	9103500010
Inner frame with lamps	9104100241

5 Intended use

The Heki2 roof light (item no. 9104100235) is suitable for installing in caravans.

The maximum permissible speed is 100 km/h, as noise or damage could occur depending on the vehicle design or installation position. The spoilers available as an optional extra enable a speed of 130 km/h.

Instructions before installation

6 Instructions before installation

➤ Before installation, check the roof thickness of your vehicle. Consult the vehicle manufacturer if you have any questions.

➤ When choosing the installation location, observe the following:
- Adjoining components (roof rack or attachment and reinforcing parts), cables and cabinets in the vehicle interior must not get damaged when sawing the hole.
- Sufficient space needs to be available for installing the inner and outer frames.
- Only fit the roof light on flat and parallel interior and exterior roof areas with a maximum inclination of 15° to the horizontal.
- You may use an existing roof hole provided the roof light fits into it.
- You can fit the roof light sideways (hinge-side at front in direction of travel) or lengthways (hinge-side on left or right in direction of travel).

6.1 Pressing out the hole

See fig. 2

6.2 Using the reinforcing rails

Supplementary to fig. 3

➤ Before installation, check whether the roof hole needs reinforcing.

➤ Remove the foam according to the width of your reinforcing rail (not in scope of delivery) (**A**).

➤ Fit the reinforcing rails (**B**).

7 Installing the Heki2

Supplementary to fig. 4

The scope of delivery includes a mounting frame, which is suitable for roof thicknesses of 25 – 32 mm. For roof thicknesses of 33 – 60 mm, you need to have a suitable mounting set (see table).

➤ Measure your roof thickness W.

➤ Choose a suitable mounting set:

Roof thickness	Mounting bracket colour	Screws	Item no.
25 – 32 mm	Grey	∅ 4 x 25 mm	Included in the scope of delivery
33 – 39 mm	Black	∅ 4 x 32 mm	9104100245
39 – 46 mm	Yellow	∅ 4 x 40 mm	9104100246
46 – 53 mm	Blue	∅ 4 x 46 mm	9104100247
53 – 60 mm	Red	∅ 4 x 52 mm	9104100248

See fig. 5

➤ Check that the roof light has sufficient space around it (approx. 1 to 2 mm) in the roof opening.

See fig. 6

➤ Clean the roof opening in the mounting area.

See fig. 7

A

NOTICE! Observe the instructions of the sealant manufacturer.

➤ Seal the mounting frame with a flexible non-hardening sealing compound (e.g. SikaLastomer-710).

Installing the Heki2

See fig. 8

➤ Check the direction of travel when installing.
You can fit the roof light sideways (hinge-side at front in direction of travel) or lengthways (hinge-side on left or right in direction of travel).

➤ Place the outer frame in the middle of the roof opening.

➤ Press the outer frame in the roof slightly so that the packing compound spreads out.

See fig. 9

➤ Place the 16 mounting supports on the inside of the vehicle all the way into the recess of the outer frame.

➤ Attach the 16 mounting supports using the fastening screws ∅ 4.
To do this use the large holes in the mounting supports.

➤ Tighten the screws 10 minutes after installation.

See fig. 0

➤ Place the inner frame on the outer frame and fasten it with the fastening screws ∅ 2.5 x 12 mm into the 16 mounting supports.
To do this use the small holes in the mounting supports.
Only fasten the screws slightly by hand.

➤ Check that the roller blinds can move freely.
If they do not, then loosen the screws slightly.

See fig. a

➤ Clip on the ventilation grille (**1**).
It needs to click in.

➤ Remove the protective film from both sides of the acrylic glass.

NOTE
If the protective film is exposed to sunlight for too long, it cannot be taken off without leaving a residue.

➤ After installing, check the roof light works properly.

➤ If necessary, enter the new vehicle height and weight in the vehicle documents.

8 Using the Heki2

8.1 Opening in the tilting position (fig. b)

➤ Press the latches on both rotary bolts and turn them 90° (**A**).

➤ Hold the bracket in the middle and move it out of the original position (**B**).

➤ Tilt it downwards.

➤ Push the glass dome upwards (**C**).
Opening the glass dome is supported by the two gas springs after approx. 150 mm.

➤ Swivel the bracket to the glass dome and press it back into the original position (**D**).

To close it, follow the instructions in the reverse order.

8.2 Opening in the half-way position (fig. c)

➤ Press the latches on both rotary bolts and turn them 90° (**A**).

➤ Hold the bracket in the middle and move it out of the original position (**B**).

➤ Tilt it downwards.

➤ Push the glass dome upwards (**C**).
Opening the glass dome is supported by the two gas springs after approx. 150 mm.

➤ Open both the latches (**D**).

➤ Tilt the bracket to the half-way position.

➤ Pull the glass dome down until the bracket is lying in the holders.

➤ Secure the bracket with both latches.

To close it, follow the instructions in the reverse order.

Using the Heki2

8.3 Opening in the continuous ventilation position (fig. d)

➤ Press the latches on both rotary bolts and turn them 90° (**A**).

➤ Push the glass dome upwards with both hands approx. 2 cm on both rotary bolts.

➤ Turn the rotary bolt into the position provided for this (**B**).

To close it, follow the instructions in the reverse order.

8.4 Closing the roller blind (fig. e)

A

NOTICE! Risk of damage due to a build-up of heat between the roller blind and the window.
In strong sunlight, only close the blackout roller blind two thirds of the way. Open the glass dome into the “continuous ventilation” position.

➤ Take hold of the recessed grip on the rod and pull it towards the rod on the other side with the pivot until they both click into one another.

➤ Select the required position by moving the two latched-roller blinds at the same time

8.5 Opening the roller blind (fig. f)

➤ Pull the roller blind so that the blind with the recessed grip is completely extended.

➤ Separate the roller blinds by pressing the pivot.

➤ Guide the roller blind back using the recessed grip.
Do not let the roller blind spring back.

9 Troubleshooting

Fault	Possible cause	Suggested remedy
The roof light does not close completely.	Dirt between the glass and frame	Clean the window. Remove any leaves and twigs between the glass and frame.
The flyscreen or black-out roller blind cannot be moved.	Dirt on the side guides	Clean the side guides.

If you are unable to rectify the fault, get in touch with a specialist workshop.

10 Maintaining and cleaning the Heki2

A

NOTICE!
Do not use any sharp or hard objects for cleaning since they may damage the acrylic glass.
Only use cleaning agents that are approved by the manufacturer. Acrylic glass polish (item no. 9104100242), special polishing cloth (item no.
9104100243) and acrylic glass cleaning agent (item no. 9104100244).

➤ Clean the roller blind with mild soap and plenty of water.

Guarantee

11 Guarantee

The statutory warranty period applies. If the product is defective, please contact the service partner in your country (addresses on the back on the instruction manual).

Our experts will be happy to help you and will discuss the warranty process with you in more detail.

12 Disposal

➤ Place the packaging material in the appropriate recycling waste bins wherever possible.

M If you wish to finally dispose of the product, ask your local recycling centre or specialist dealer for details about how to do this in accordance with the applicable disposal regulations.